Changed C 25 from 4.7uF 10%, 75V to 3.9uF, 10%, 75V

Delete RH1 and L1

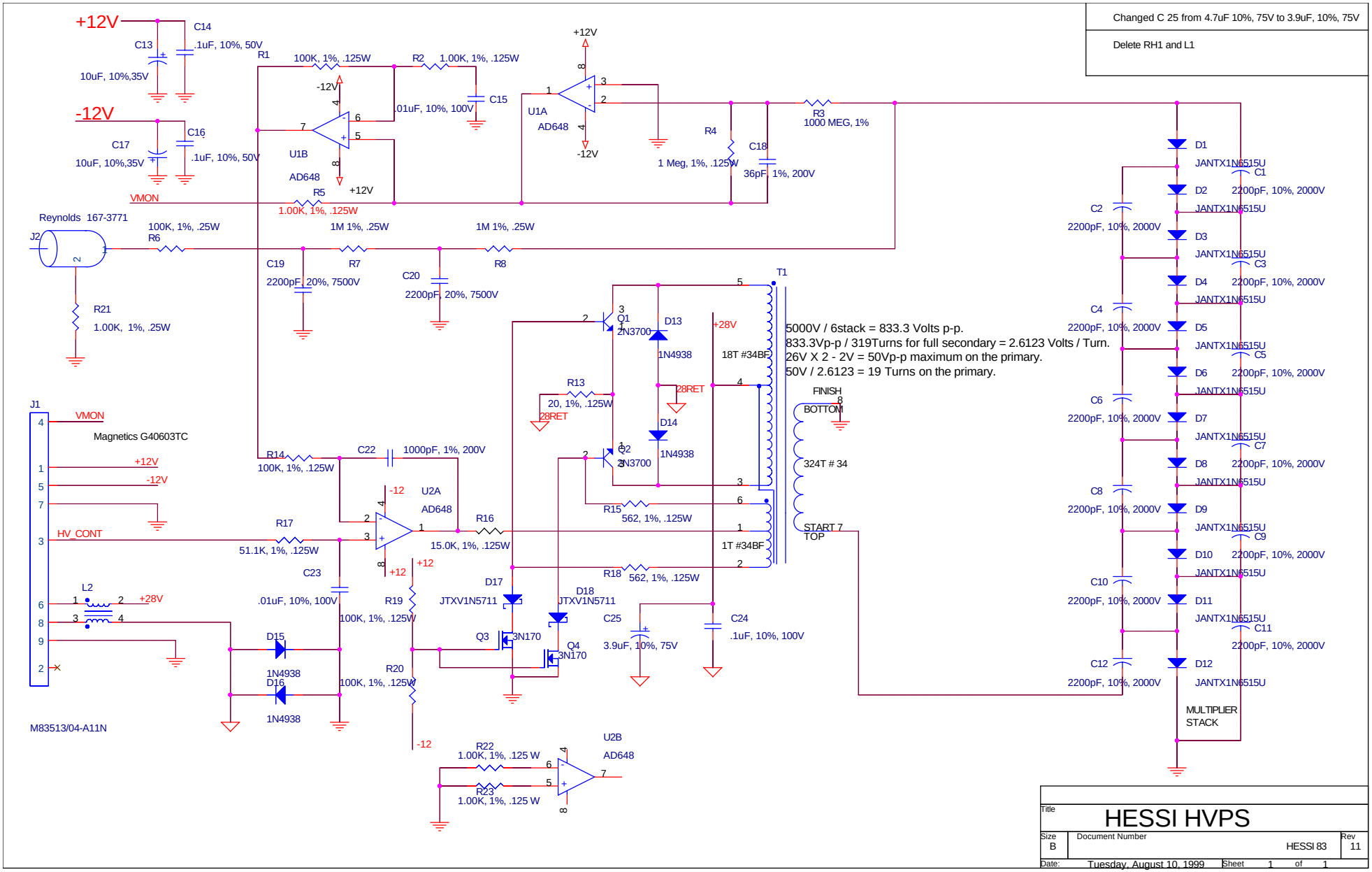

Title	HESSI HVPS		
Size B	Document Number	HESSI 83	Rev 11
Date: Tuesday, August 10, 1999	Sheet 1 of 1		